THERMA TRU DOORS

Veris™ Collection

"VERIS V3" GLAZED ALUMINUM PIVOT DOOR SINGLE w/ or w/out SIDELITE(S)

OUTSWING

"IMPACT"

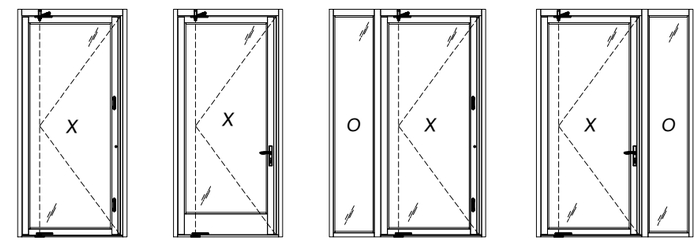

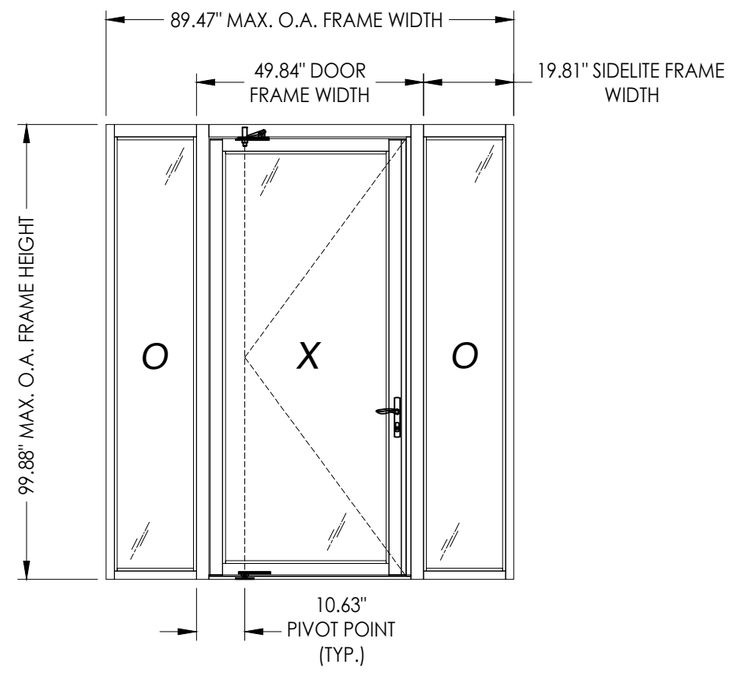

GENERAL NOTES

1. This product has been evaluated and is in compliance with the 9th Edition (2026) Florida Building Code (FBC) structural requirements excluding the "High Velocity Hurricane Zone" (HVHZ).
2. Product anchors shall be as listed and spaced as shown on details. Anchor embedment to base material shall be beyond wall dressing or stucco.
3. When used in areas requiring wind borne debris protection this product complies with FBC Sections 1609.1.2 & R301.2.1.2 and does not require an impact resistant covering. This product meets missile level "D" and includes Wind Zone 4 as defined in ASTM E1996.
4. For 2x stud framing construction, anchoring of these units shall be the same as that shown for 2x buck masonry construction.
5. Site conditions that deviate from the details of this drawing require further engineering analysis by a licensed engineer or registered architect.

TABLE OF CONTENTS

SHEET #	DESCRIPTION
1	Typical Elevations, Design Pressures & General Notes
2	Door & Sidelite Panels & Glazing Details
3	Elevations
4	Horizontal & Vertical Cross Sections (2X Buck)
5	Horizontal Cross Sections (2X Buck)
6	Horizontal & Vertical Cross Sections (1X Buck)
7	Horizontal & Vertical Cross Sections (Direct to Masonry)
8	Horizontal Cross Sections
9	Vertical Cross Sections
10	Buck Anchoring
11	Frame Anchoring
12	Bill of Materials & Components

CONFIGURATION	MAX. FRAME DIMENSION	DOOR MAX. D.L.O.	SIDELITE MAX. D.L.O.	DESIGN PRESSURE (PSF)	
				POSITIVE	NEGATIVE
X	47.97" x 99.88"	35.25" X 89.25"	N/A	+50.0	-50.0
OX/XO	68.72" x 99.88"	35.25" X 89.25"	16.75" X 94.06"	+50.0	-50.0
OXO	89.47" x 99.88"	35.25" X 89.25"	16.75" X 94.06"	+50.0	-50.0

L. F. SCHMIDT LICENSE No. 43409 STATE OF FLORIDA PROFESSIONAL ENGINEER

Digitally signed by Lyndon F Schmidt
Date: 2026.08.10 11:45:06 -04'00'

This item has been digitally signed and sealed by **L. F. Schmidt, P.E.** on the date adjacent to the seal.

Printed copies of this document are not considered signed and sealed and the signature must be verified on any electronic copies.

THIS PRODUCT APPROVAL IS VALID ONLY FOR THE STATE OF FLORIDA

Documents Prepared By:
Lyndon F. Schmidt
P.E. No. 43409

RW BUILDING CONSULTANTS, INC.
P.O. Box 230, Valrico, FL 33595
Phone No.: 813.659.9197
FBPE Registry No. 9813

PRODUCT: THERMA TRU

PART OR ASSEMBLY: TYPICAL ELEVATION, DESIGN PRESSURES & GENERAL NOTES

NO.	DATE	REVISIONS	BY
1	7/03/26	UPDATE TO 9TH ED. (2026) FBC	LFS

DATE: 2/07/24
SCALE: N.T.S.
DWG. BY: LFS
CHK. BY: RW
DRAWING NO.: FL-46173.5
SHEET 1 OF 12

© 2024 R.W. Building Consultants Inc.

Z:\2023 FBC Drawings\Therma-Tru\FL-46173 R1\FL 46173.5.dwg

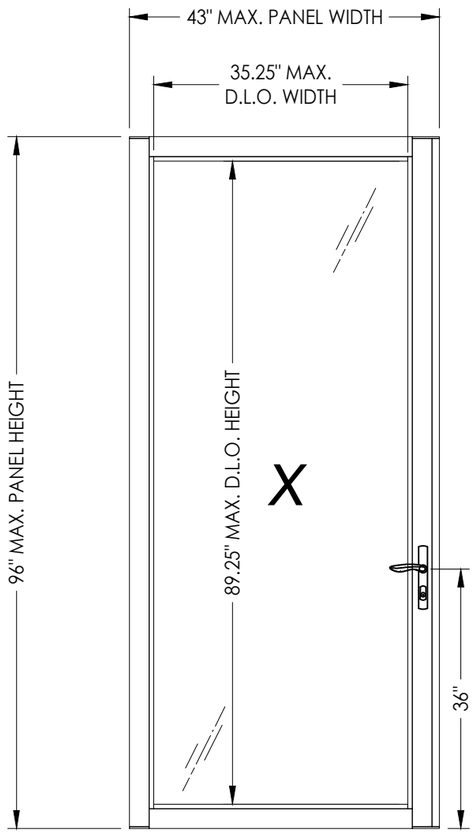

DOOR PANEL

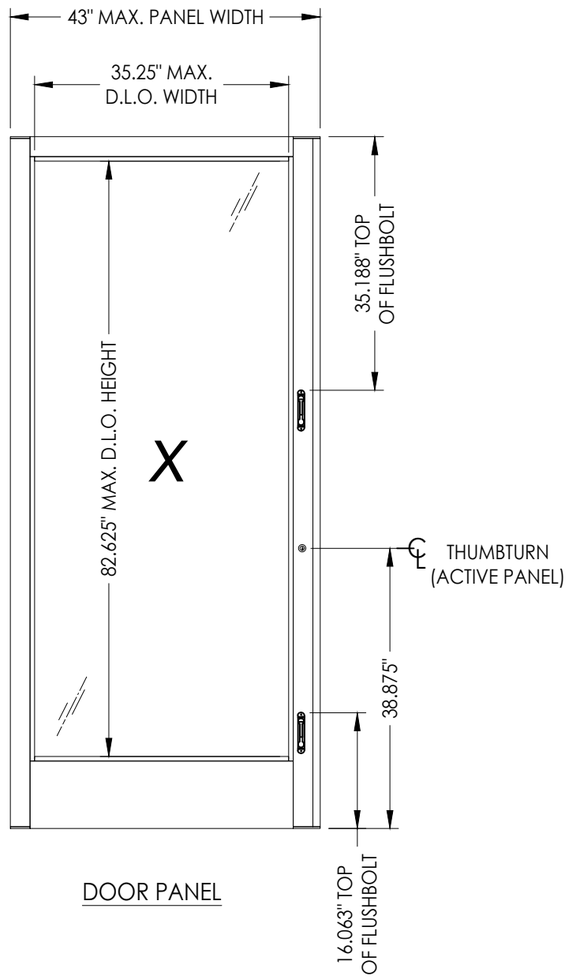

DOOR PANEL

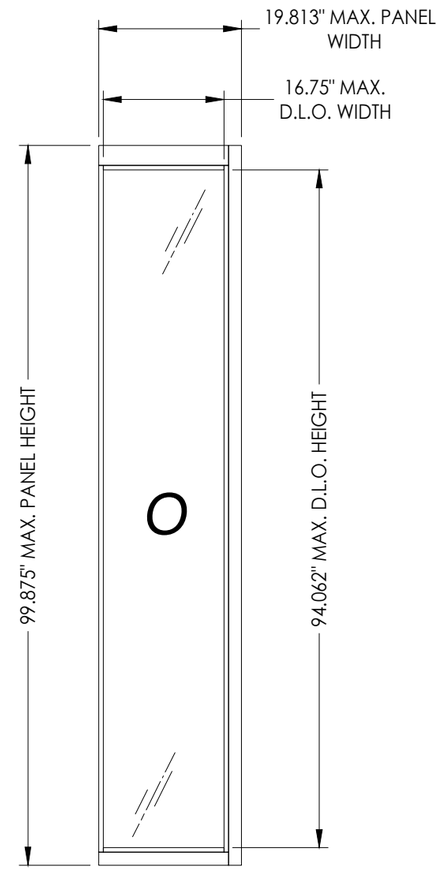

SIDELITE PANEL

HARDWARE TABLE	
MANUFACTURER	**MODEL**
HOPPE	**HOPPE HLS9000** **ACTIVE: LEVER w/ 3 pt. LOCK**
ADAMS RITE	**ACTIVE: THUMBTURN & KEYED CYLINDER** **MS+ 1890 SERIES DEADBOLT**
TERRY HINGE & HARDWARE	**ACTIVE: FLUSHBOLTS**

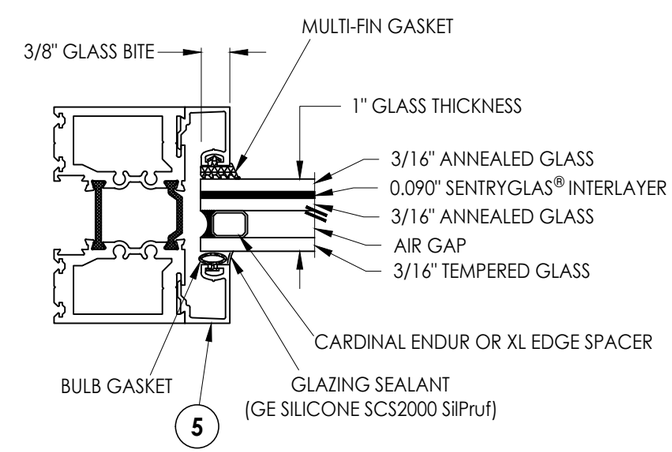

G1 GLAZING DETAIL

Documents Prepared By:
Lyndon F. Schmidt
P.E. No. 43409

RW BUILDING CONSULTANTS, INC.
P.O. Box 230, Valrico, FL 33595
Phone No.: 813.659.9197
FBPE Registry No. 9813

PRODUCT: THERMA-TRU

PART OR ASSEMBLY: DOOR & SIDELITE PANELS & GLAZING DETAILS

NO.	DATE	REVISIONS	BY
1	7/03/26	UPDATE TO 9TH ED. (2026) FBC	LFS

DATE: 2/07/24
SCALE: N.T.S.
DWG. BY: LFS
CHK. BY: RW
DRAWING NO.: FL-46173.5
SHEET 2 OF 12

© 2024 R.W. Building Consultants Inc.

Z:\2023 FBC Drawings\Therma-Tru\FL-46173 R1\FL 46173.5.dwg

Z:\2023 FBC Drawings\Therma-Tru\FL-46173 R1\FL 46173.5.dwg

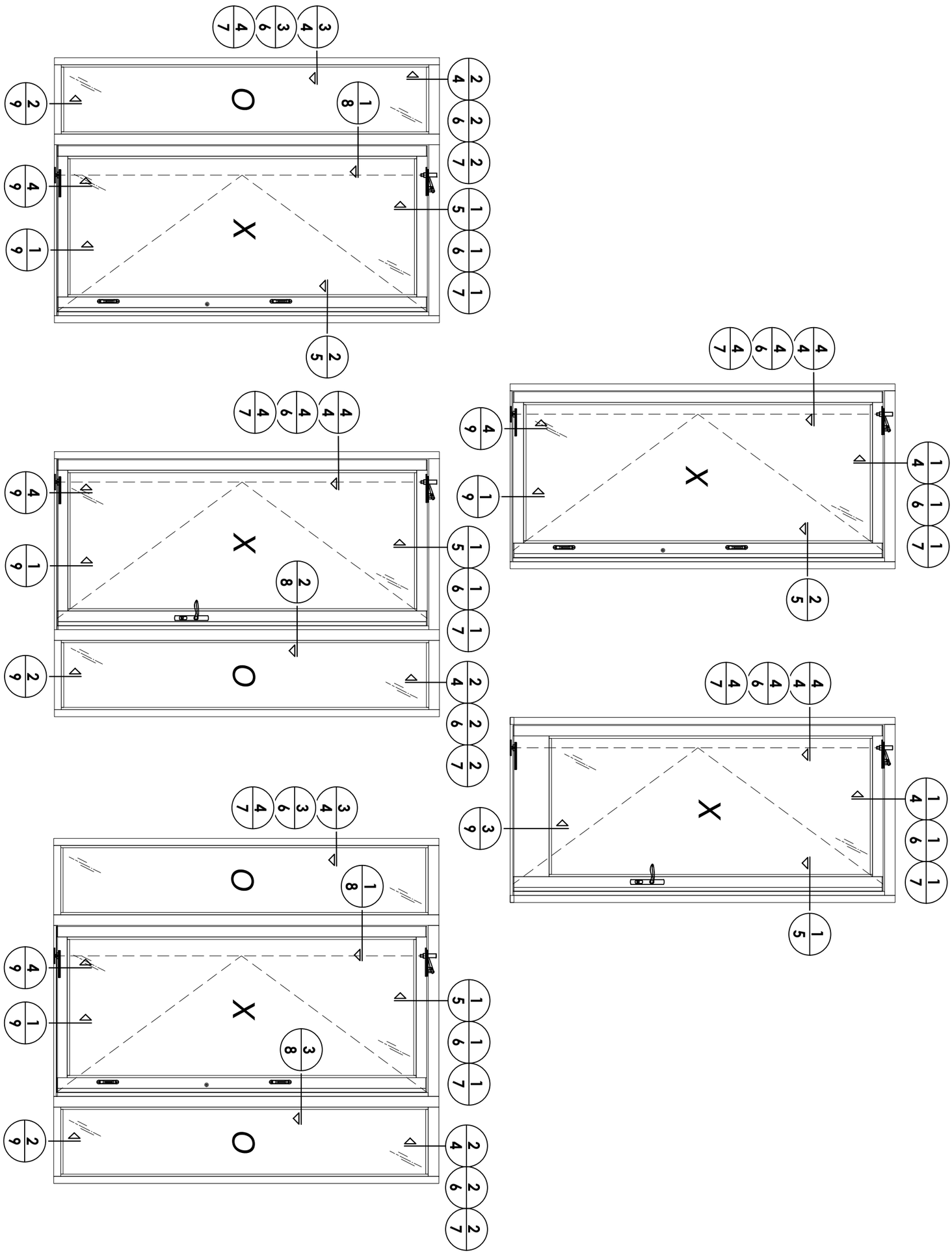

1	7/03/26	UPDATE TO 9TH ED. (2026) FBC	LFS
NO.	DATE		BY
		REVISIONS	

PRODUCT: THERMA-TRU

PART OR ASSEMBLY: ELEVATIONS

Documents Prepared By:
Lyndon F. Schmidt
P.E. No. 43409

RW BUILDING CONSULTANTS, INC.
P.O. Box 230, Valrico, FL 33595
Phone No.: 813.659.9197
FBPE Registry No. 9813

DATE: 2/07/24
SCALE: N.T.S.
DWG. BY: LFS
CHK. BY: RW
DRAWING NO.: FL-46173.5
SHEET 3 OF 12

© 2024 R.W. Building Consultants Inc.

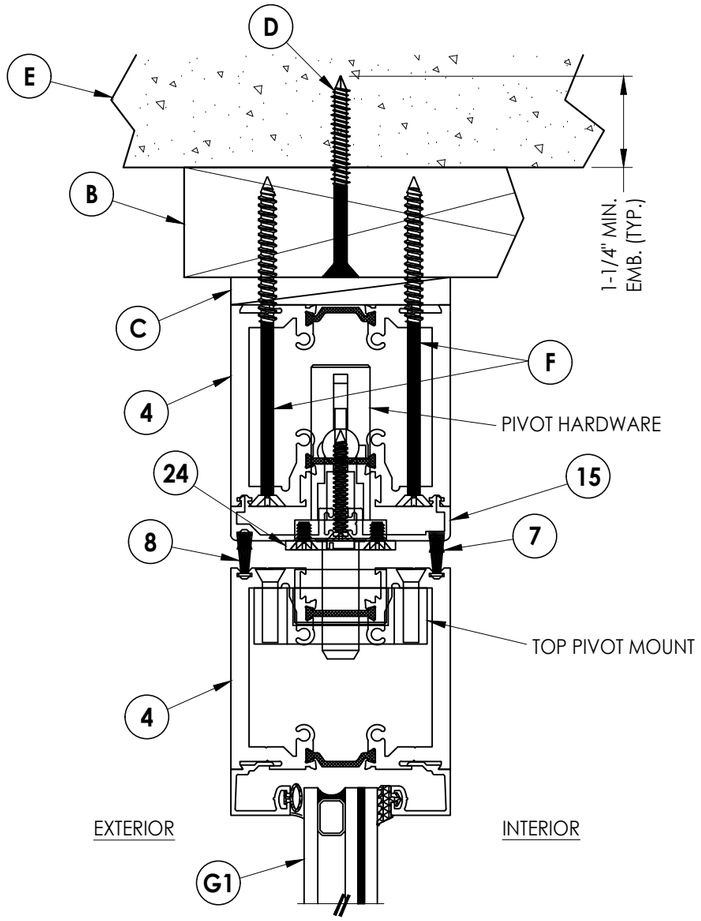

1/4 VERTICAL CROSS SECTION
Shown w/ 2X Buck

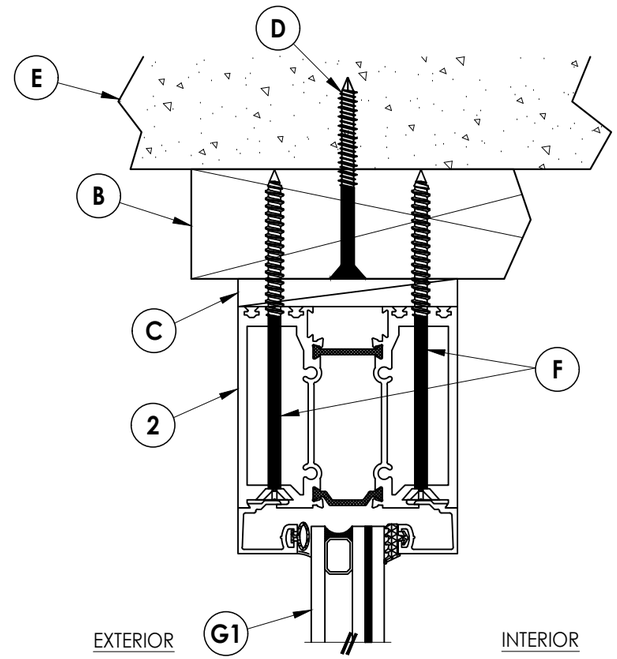

2/4 VERTICAL CROSS SECTION
Shown w/ 2X Buck

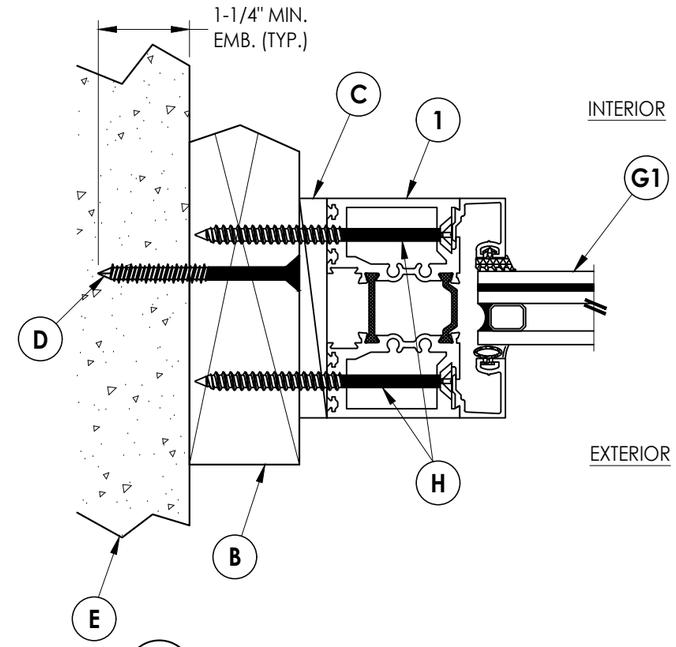

3/4 HORIZONTAL CROSS SECTION
Shown w/ 2X Buck

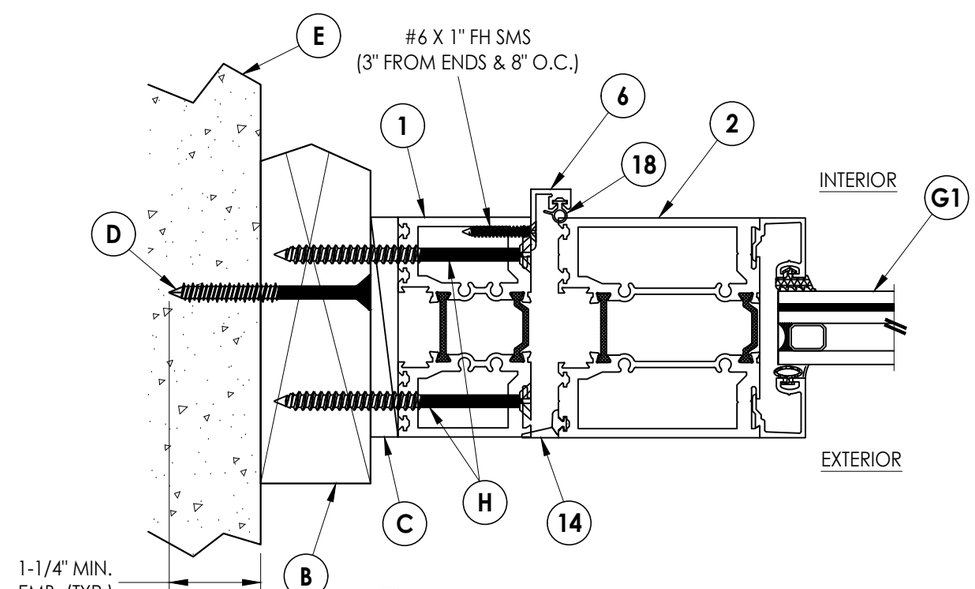

4/4 HORIZONTAL CROSS SECTION
Shown w/ 2X Buck

Documents Prepared By:
Lyndon F. Schmidt
P.E. No. 43409

RW BUILDING CONSULTANTS, INC.
P.O. Box 230, Valrico, FL 33595
Phone No.: 813.659.9197
FBPE Registry No. 9813

PRODUCT: THERMA–TRU

PART OR ASSEMBLY: HORIZONTAL & VERTICAL CROSS SECTIONS (2X BUCK)

NO.	DATE		BY
1	7/03/26	UPDATE TO 9TH ED. (2026) FBC	LFS

REVISIONS

DATE: 2/07/24
SCALE: N.T.S.
DWG. BY: LFS
CHK. BY: RW
DRAWING NO.: FL–46173.5
SHEET 4 OF 12

© 2024 R.W. Building Consultants Inc.

Z:\2023 FBC Drawings\Therma-Tru\FL-46173 R1\FL 46173.5.dwg

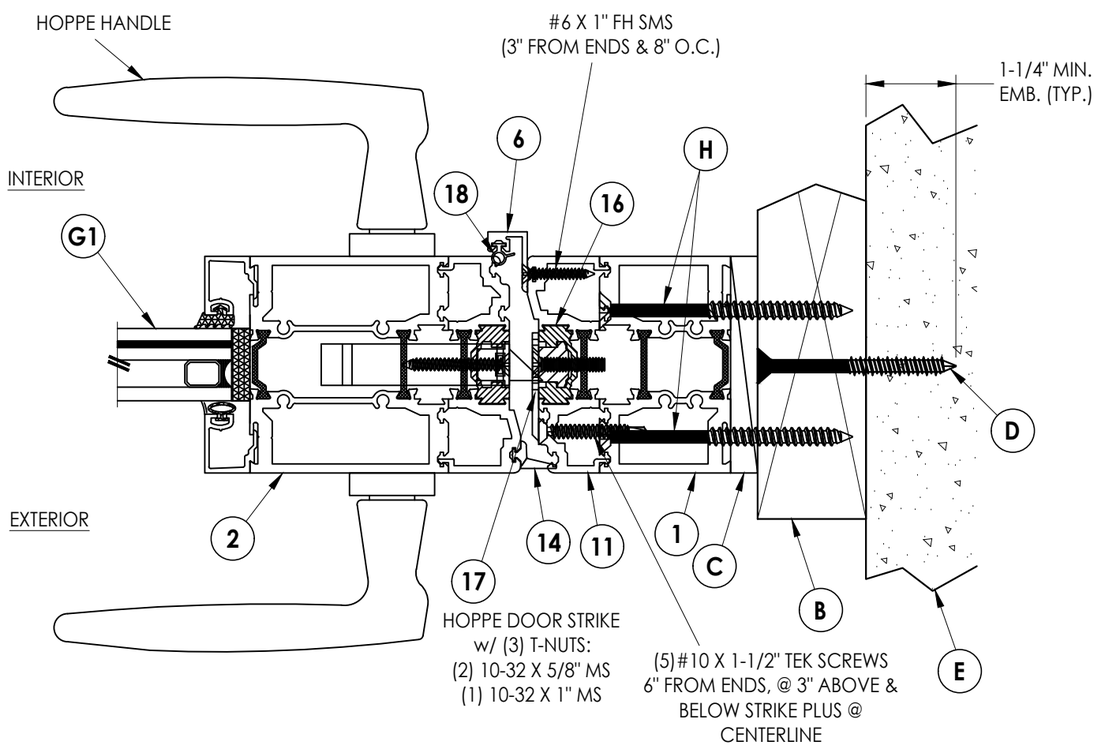

1/5 **HORIZONTAL CROSS SECTION**
Shown w/ 2X Buck

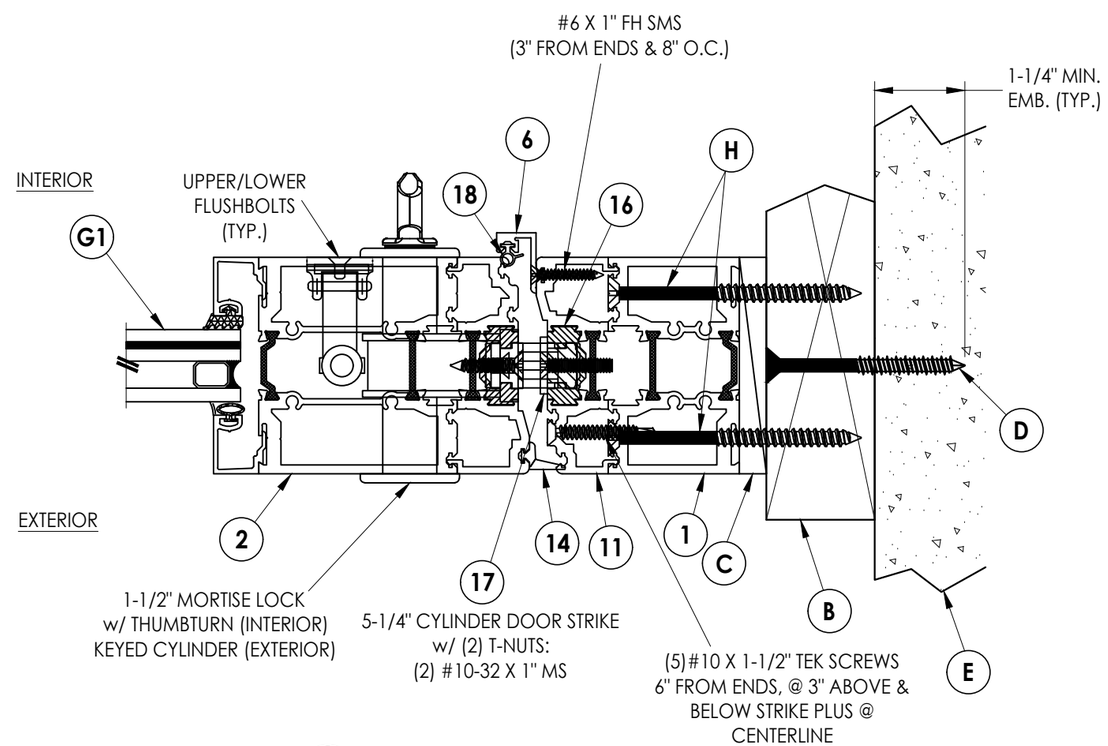

2/5 **HORIZONTAL CROSS SECTION**
Shown w/ 2X Buck

Documents Prepared By:
Lyndon F. Schmidt
P.E. No. 43409
RW BUILDING CONSULTANTS, INC.
P.O. Box 230, Valrico, FL 33595
Phone No.: 813.659.9197
FBPE Registry No. 9813

PRODUCT: THERMA–TRU

PART OR ASSEMBLY: HORIZONTAL CROSS SECTIONS (2X BUCK)

NO.	DATE	REVISIONS	BY
1	7/03/26	UPDATE TO 9TH ED. (2026) FBC	LFS

DATE: 2/07/24
SCALE: N.T.S.
DWG. BY: LFS
CHK. BY: RW
DRAWING NO.: FL–46173.5
SHEET 5 OF 12

© 2024 R.W. Building Consultants Inc.

Z:\2023 FBC Drawings\Therma-Tru\FL-46173 R1\FL 46173.5.dwg

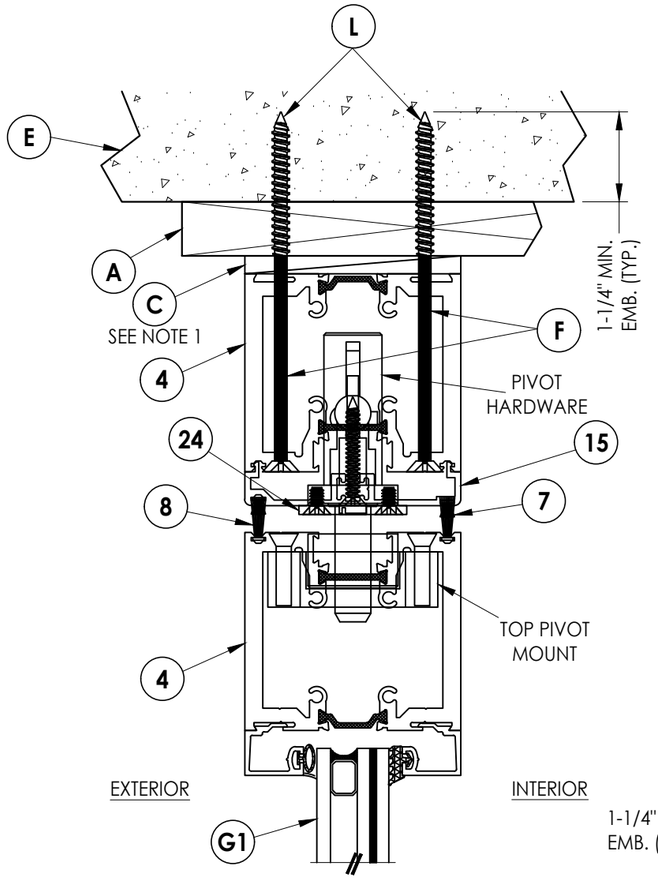

1/6 VERTICAL CROSS SECTION
Shown w/ 1X Buck

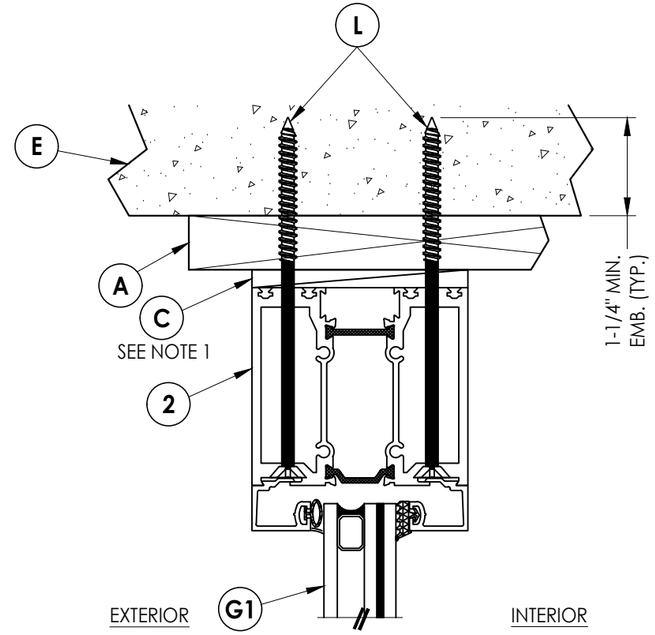

2/6 VERTICAL CROSS SECTION
Shown w/ 1X Buck

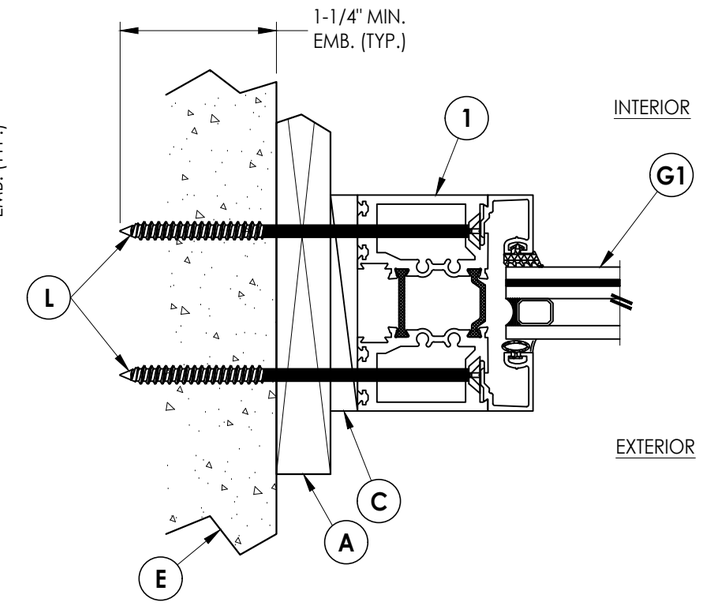

3/6 HORIZONTAL CROSS SECTION
Shown w/ 1X Buck

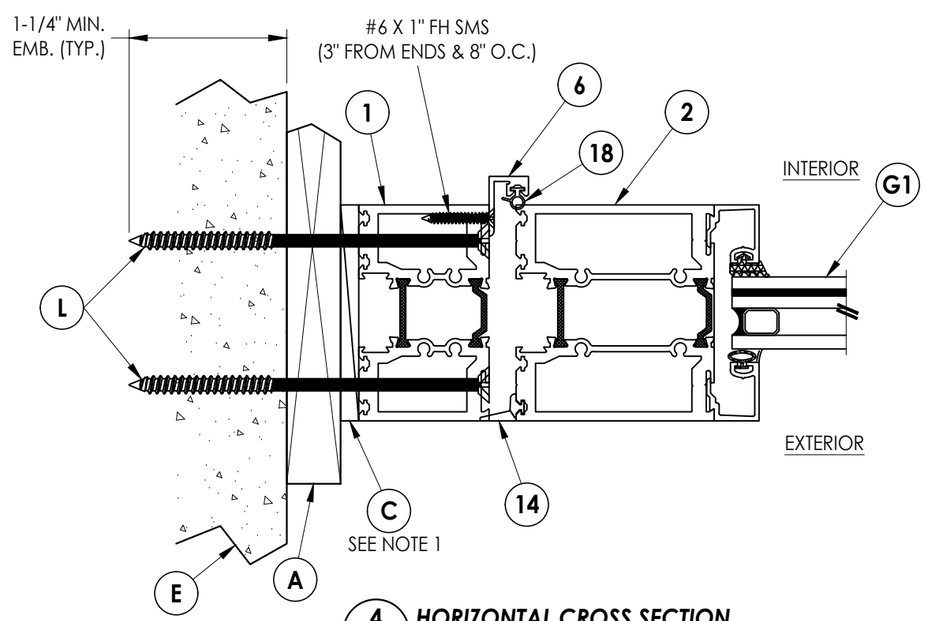

4/6 HORIZONTAL CROSS SECTION
Shown w/ 1X Buck

NOTE:
1. MAXIMUM 1/4" SHIM @ HEAD & JAMBS w/ 1X BUCK AS SHOWN.

Documents Prepared By:
Lyndon F. Schmidt
P.E. No. 43409

RW BUILDING CONSULTANTS, INC.
P.O. Box 230, Valrico, FL 33595
Phone No.: 813.659.9197
FBPE Registry No. 9813

PRODUCT: THERMA–TRU

PART OR ASSEMBLY: HORIZONTAL & VERTICAL CROSS SECTIONS (1X BUCK)

NO.	DATE	REVISIONS	BY
1	7/03/26	UPDATE TO 9TH ED. (2026) FBC	LFS

DATE: 2/07/24
SCALE: N.T.S.
DWG. BY: LFS
CHK. BY: RW
DRAWING NO.: FL–46173.5
SHEET 6 OF 12

© 2024 R.W. Building Consultants Inc.

Z:\2023 FBC Drawings\Therma-Tru\FL-46173 R1\FL 46173.5.dwg

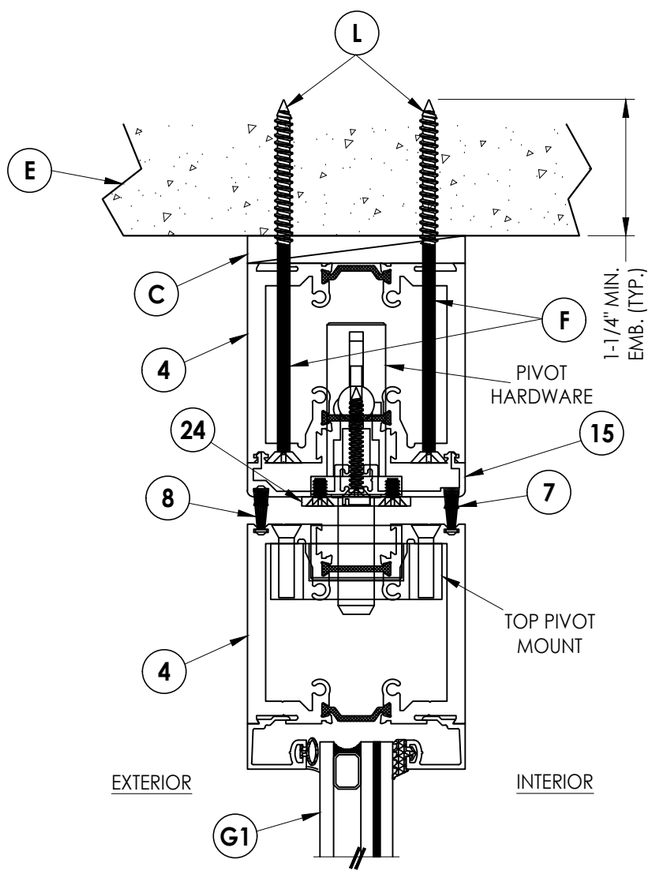

1/7 VERTICAL CROSS SECTION
Shown Direct to Masonry

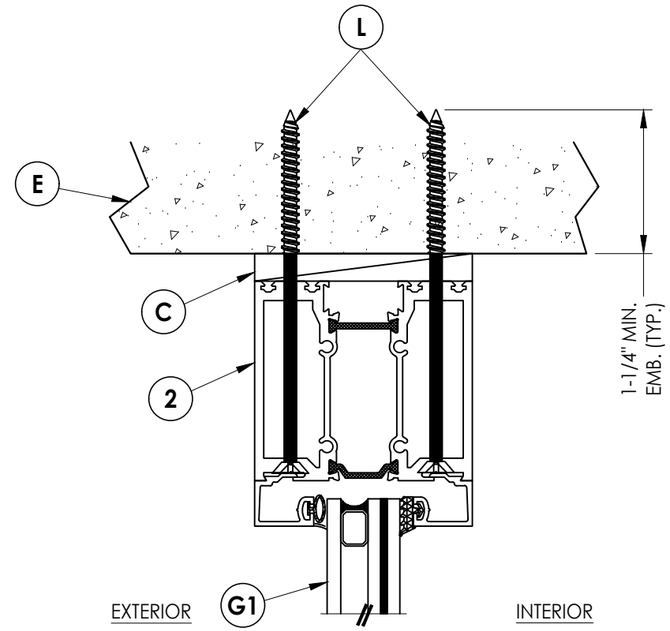

2/7 VERTICAL CROSS SECTION
Shown Direct to Masonry

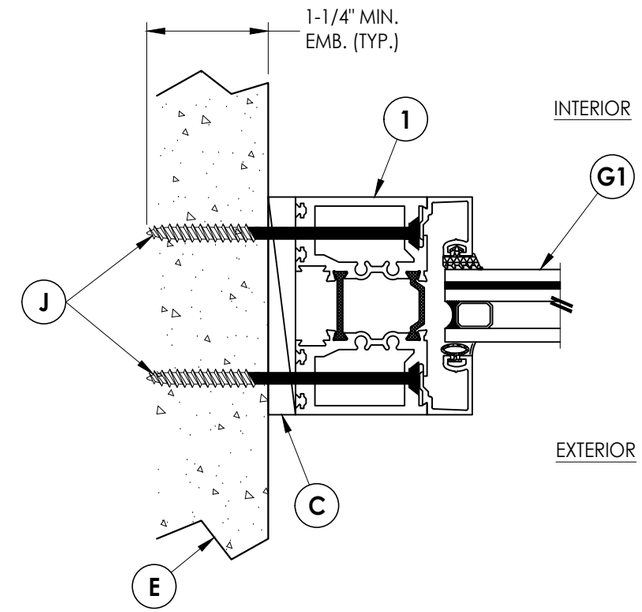

3/7 HORIZONTAL CROSS SECTION
Shown Direct to Masonry

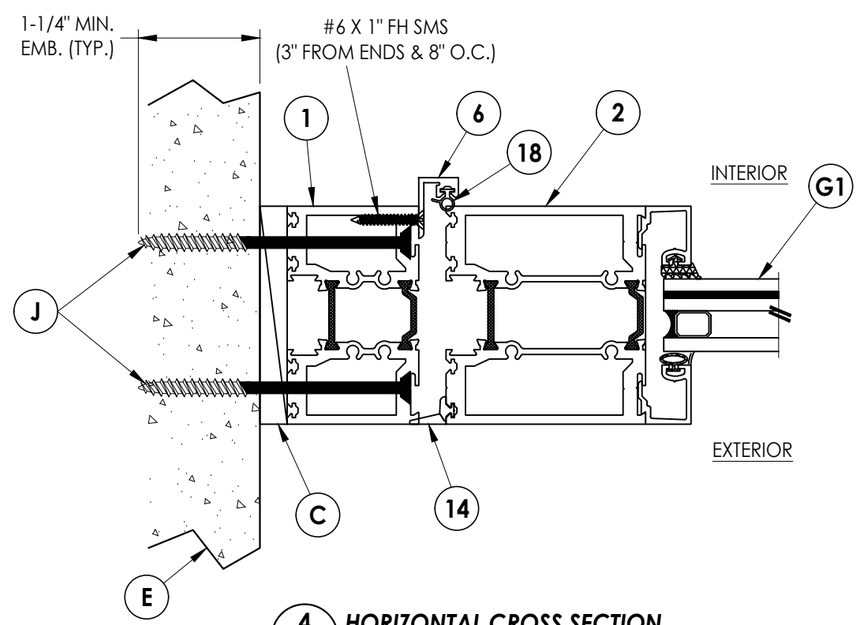

4/7 HORIZONTAL CROSS SECTION
Shown Direct to Masonry

Documents Prepared By:
Lyndon F. Schmidt
P.E. No. 43409

RW BUILDING CONSULTANTS, INC.
P.O. Box 230, Valrico, FL 33595
Phone No.: 813.659.9197
FBPE Registry No. 9813

PRODUCT: THERMA-TRU

PART OR ASSEMBLY: HORIZONTAL & VERTICAL CROSS SECTIONS (DIRECT TO MASONRY)

REVISIONS

NO.	DATE		BY
1	7/03/26	UPDATE TO 9TH ED. (2026) FBC	LFS

DATE: 2/07/24
SCALE: N.T.S.
DWG. BY: LFS
CHK. BY: RW
DRAWING NO.: FL-46173.5
SHEET 7 OF 12

© 2024 R.W. Building Consultants Inc.

Z:\2023 FBC Drawings\Therma-Tru\FL-46173 R1\FL 46173.5.dwg

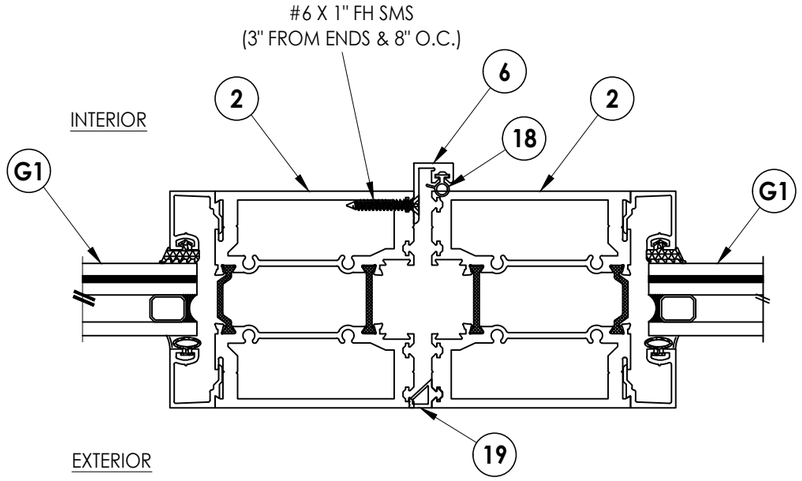

1/8 **HORIZONTAL CROSS SECTION**

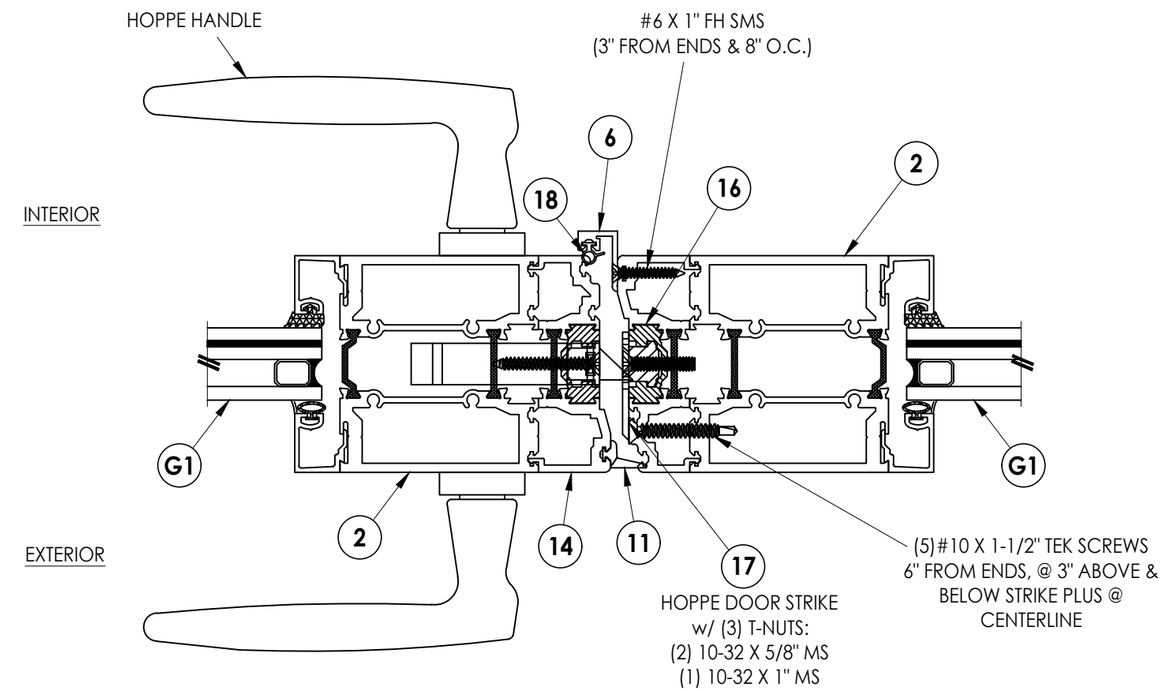

2/8 **HORIZONTAL CROSS SECTION**

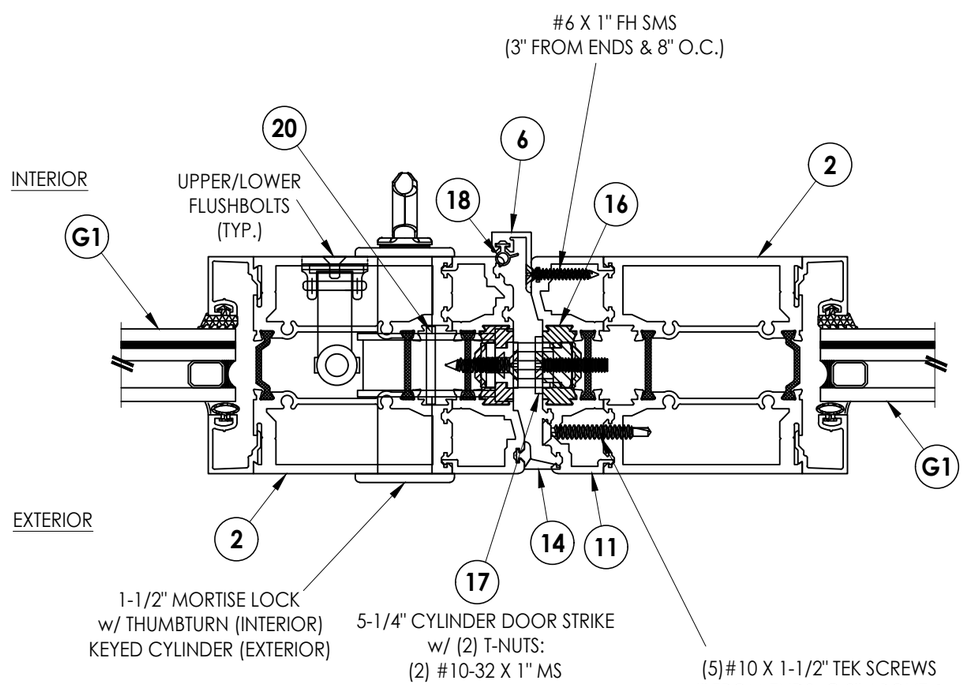

3/8 **HORIZONTAL CROSS SECTION**

Documents Prepared By:
Lyndon F. Schmidt
P.E. No. 43409
RW BUILDING CONSULTANTS, INC.
P.O. Box 230, Valrico, FL 33595
Phone No.: 813.659.9197
FBPE Registry No. 9813

PRODUCT: *THERMA–TRU*

PART OR ASSEMBLY: *HORIZONTAL CROSS SECTIONS*

NO.	DATE		BY
1	7/03/26	UPDATE TO 9TH ED. (2026) FBC	LFS

REVISIONS

DATE: 2/07/24
SCALE: N.T.S.
DWG. BY: LFS
CHK. BY: RW
DRAWING NO.: FL–46173.5
SHEET 8 OF 12

© 2024 R.W. Building Consultants Inc.

Z:\2023 FBC Drawings\Therma-Tru\FL-46173 R1\FL 46173.5.dwg

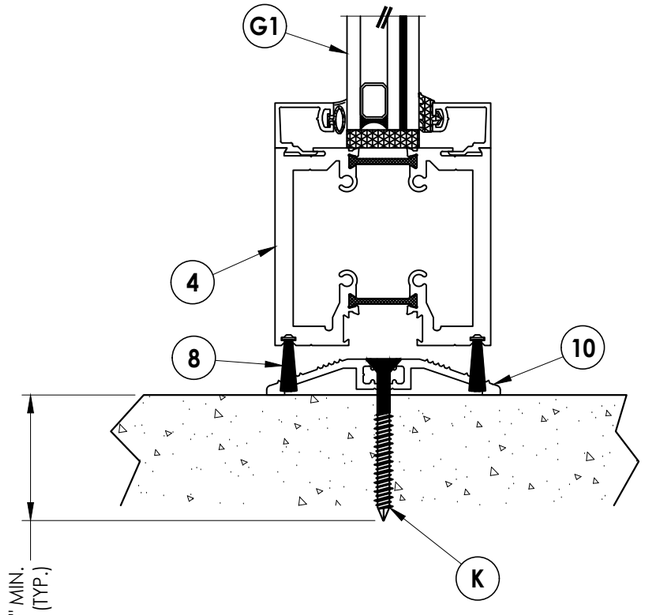

1/9 **VERTICAL CROSS SECTION**
ADA SILL

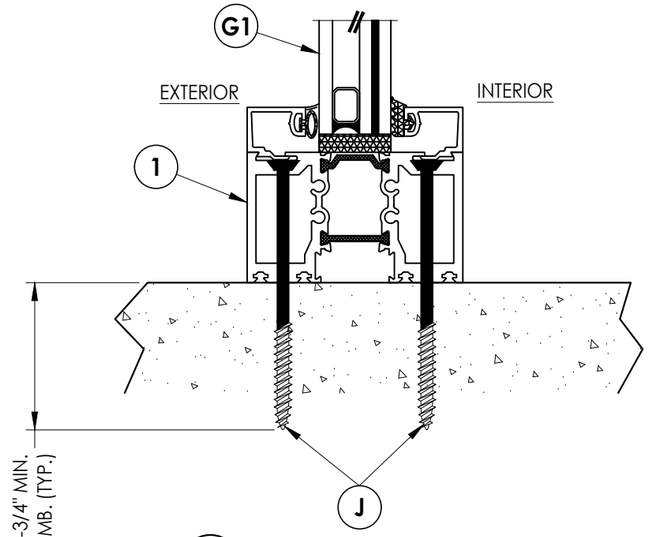

2/9 **VERTICAL CROSS SECTION**

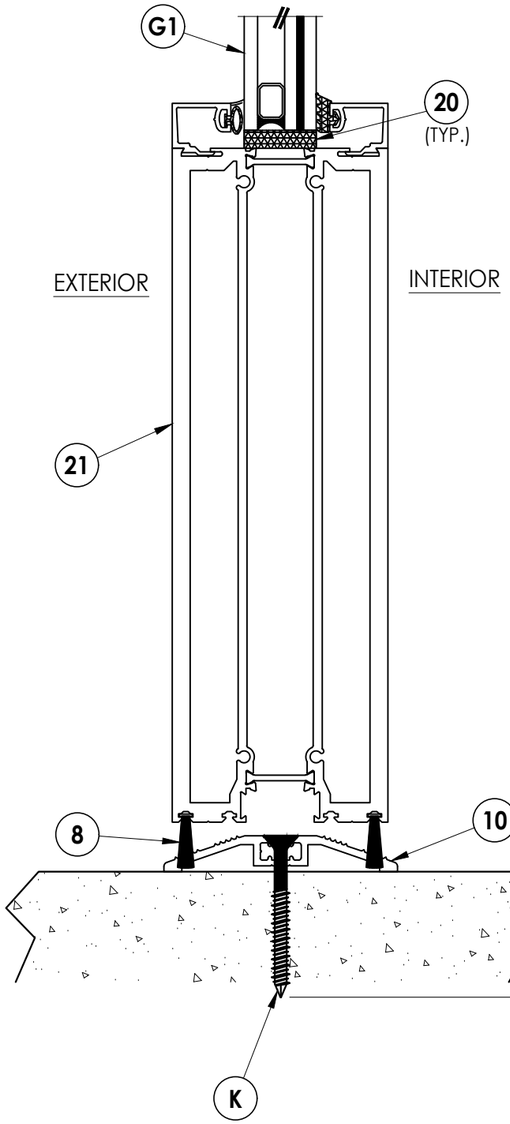

3/9 **VERTICAL CROSS SECTION**

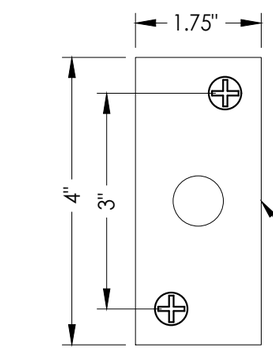

PIVOT HINGE FLOOR PLATE PLAN VIEW

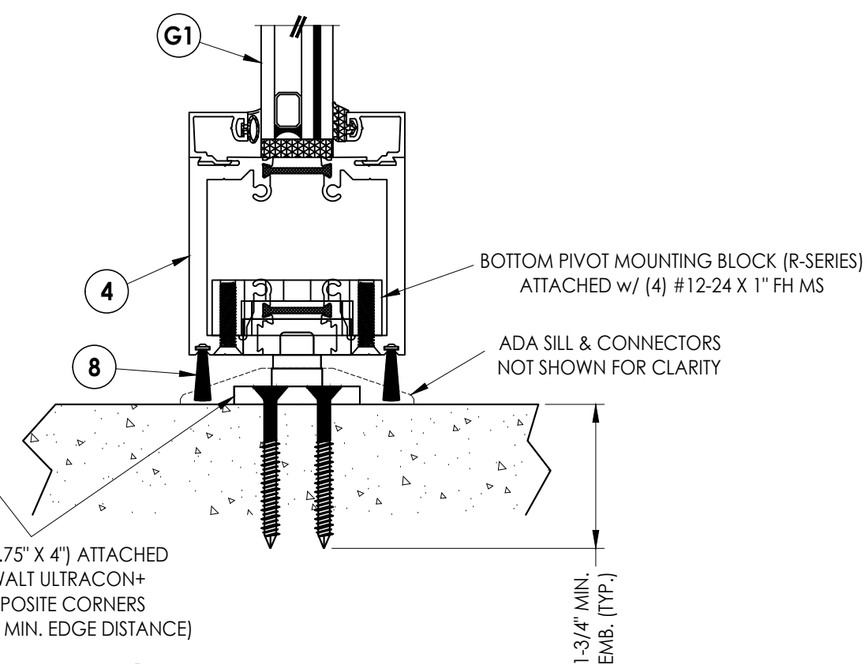

4/9 **VERTICAL CROSS SECTION**
@ PIVOT STRIKE

Z:\2023 FBC Drawings\Therma-Tru\FL-46173 R1\FL 46173.5.dwg

Documents Prepared By:
Lyndon F. Schmidt
P.E. No. 43409

RW BUILDING CONSULTANTS, INC.
P.O. Box 230, Valrico, FL 33595
Phone No.: 813.659.9197
FBPE Registry No. 9813

PRODUCT: THERMA-TRU

PART OR ASSEMBLY: VERTICAL CROSS SECTIONS

NO.	DATE	REVISIONS	BY
1	7/03/26	UPDATE TO 9TH ED. (2026) FBC	LFS

DATE: 2/07/24
SCALE: N.T.S.
DWG. BY: JK
CHK. BY: RW
DRAWING NO.: FL-46173.5
SHEET 9 OF 12

© 2024 R.W. Building Consultants Inc.

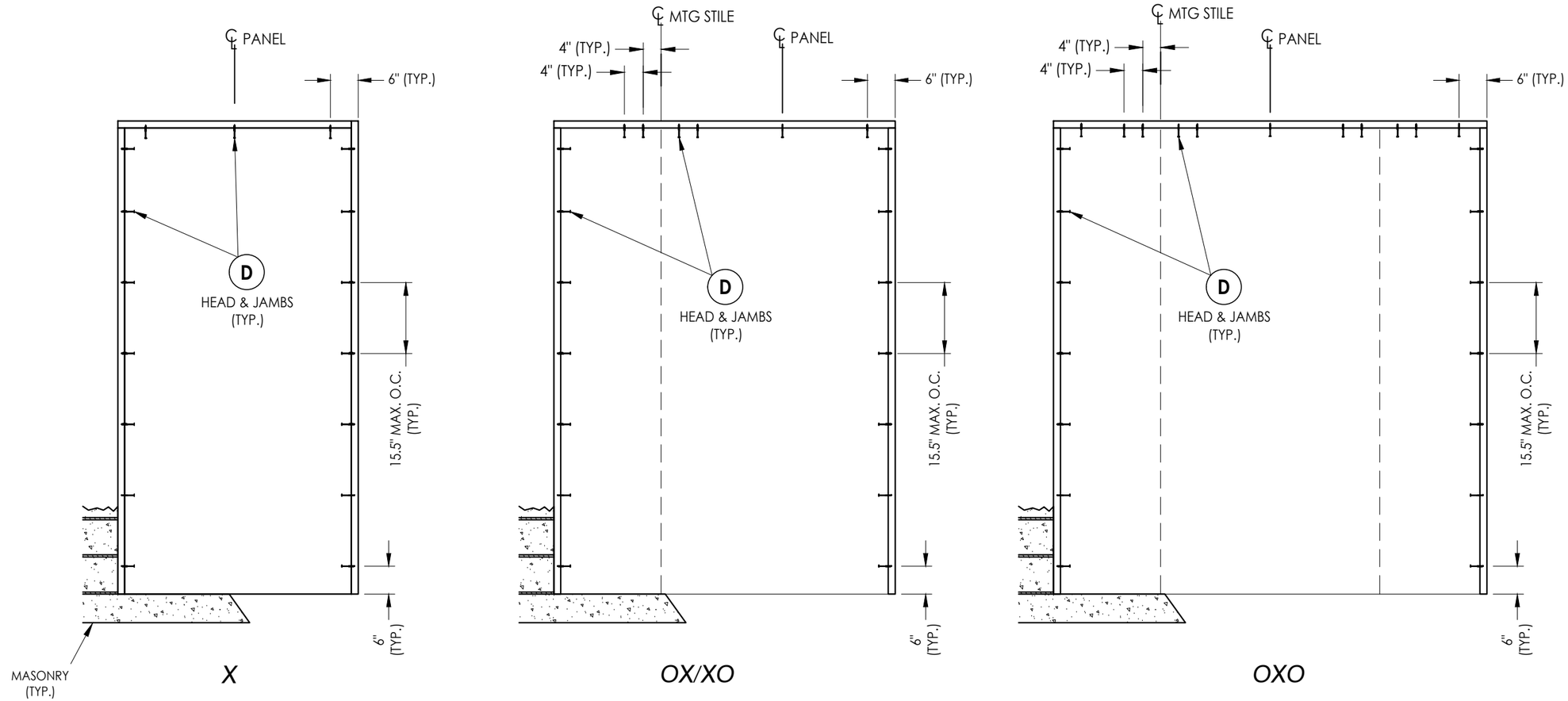

2X BUCK ANCHORING

CONCRETE ANCHOR NOTES:

1. *Concrete anchor locations at the corners may be adjusted to maintain the min. edge distance to mortar joints.*
2. *Concrete anchor locations noted as "MAX. ON CENTER" must be adjusted to maintain the min. edge distance to mortar joints, additional concrete anchors may be required to ensure the "MAX. ON CENTER" dimension are not exceeded.*
3. *Concrete anchor table:*

ANCHOR TYPE	ANCHOR SIZE	MIN. EMBEDMENT	MIN. CLEARANCE TO MASONRY EDGE	MIN. CLEARANCE TO ADJACENT ANCHOR
ITW TAPCON®	1/4"	1-1/4" 1-3/4" (SILL)	2"	4"
DeWALT ULTRACON®	1/4"	1-1/4" 1-3/4" (SILL)	1"	4"

WOOD SCREW INSTALLATION NOTES:

1. *Maintain a minimum 5/8" edge distance, 1" end distance, & 1" o.c. spacing of wood screws to prevent the splitting of wood.*

Documents Prepared By:
Lyndon F. Schmidt
P.E. No. 43409
RW BUILDING CONSULTANTS, INC.
P.O. Box 230, Valrico, FL 33595
Phone No.: 813.659.9197
FBPE Registry No. 9813

PRODUCT: *THERMA TRU*

PART OR ASSEMBLY: *BUCK ANCHORING*

REVISIONS

NO.	DATE		BY
1	7/03/26	UPDATE TO 9TH ED. (2026) FBC	LFS

DATE: 2/07/24
SCALE: N.T.S.
DWG. BY: JK
CHK. BY: RW
DRAWING NO.: FL-46173.5
SHEET 10 OF 12

© 2024 R.W. BUILDING CONSULTANTS INC.

Z:\2023 FBC Drawings\Therma-Tru\FL-46173 R1\FL 46173.5.dwg

NOTE: ALL ANCHORS SHOWN ARE STAGGERED EXCEPT FOR THE ADA SILL ANCHORS (SEE CROSS-SECTIONS)

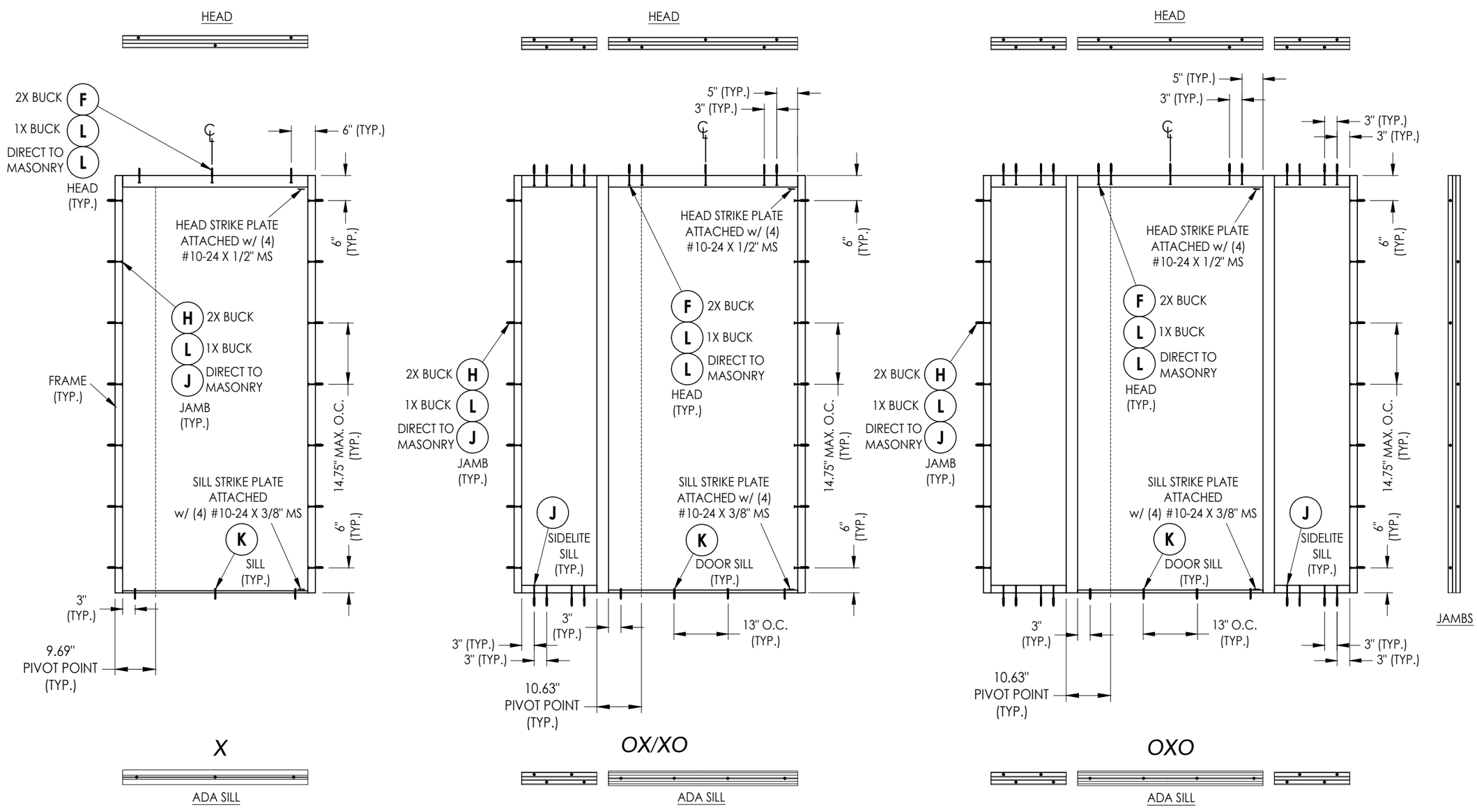

FRAME ANCHORING

Documents Prepared By:
Lyndon F. Schmidt
P.E. No. 43409

RW BUILDING CONSULTANTS, INC.
P.O. Box 230, Valrico, FL 33595
Phone No.: 813.659.9197
FBPE Registry No. 9813

PRODUCT: THERMA TRU

PART OR ASSEMBLY: FRAME ANCHORING

NO.	DATE	REVISIONS	BY
1	7/03/26	UPDATE TO 9TH ED. (2026) FBC	LFS

DATE: 2/07/24
SCALE: N.T.S.
DWG. BY: JK
CHK. BY: RW
DRAWING NO.: FL-46173.5
SHEET 11 OF 12

© 2024 R.W. BUILDING CONSULTANTS INC.

Z:\2023 FBC Drawings\Therma-Tru\FL-46173 R1\FL 46173.5.dwg

BILL OF MATERIALS

ITEM	DESCRIPTION	MATERIAL
A	1X BUCK (SG >= 0.42)	WOOD
B	2X BUCK (SG >= 0.42)	WOOD
C	3/8" MAX. SHIM SPACE	-
D	1/4" X 2-3/4" PFH DeWALT OR ITW CONCRETE SCREW	STEEL
E	MASONRY - 3,000 PSI MIN. CONCRETE CONFORMING TO ACI 301 OR HOLLOW BLOCK CONFORMING TO ASTM C90	CONCRETE
F	#14 X 4-1/2" FH SMS (1-1/4" MIN. EMBEDMENT)	S.S.
H	#14 X 3-1/2" FH SMS (1-1/4" MIN. EMBEDMENT)	S.S.
J	1/4" X 3-3/4" PFH DeWALT OR ITW CONCRETE SCREW	STEEL
K	1/4" X 2-1/4" PFH DeWALT OR ITW CONCRETE SCREW	STEEL
L	1/4" X 5" PFH DeWALT OR ITW CONCRETE SCREW	STEEL
1	LT NARROW FRAME	6063-T6 ALUM
2	LT FRAME	6063-T6 ALUM
4	PIVOT FRAME	6063-T6 ALUM
5	1/4" GLASS STOP	6063-T6 ALUM
6	SLIDE-IN DOOR STOP	6063-T5 ALUM
7	FELT WEATHERSTRIP	-
8	3/4" BRUSH WEATHERSTRIP	-
10	ADA SILL	6063-T5 ALUM
11	SWING DOOR ADAPTER	6063-T6 ALUM
14	DOOR SWEEP FOAM GASKET	-
15	DOOR ADAPTER	6063-T6 ALUM
16	16mm EUROGROOVE	-
17	HOPPE DOOR STRIKE	S.S.
18	BULB GASKET	-
19	DOOR GASKET	-
20	SETTING BLOCK	-
21	DOOR BOTTOM PANEL	6063-T5 ALUM
24	STRIKE PLATE (@ HEAD)	S.S.

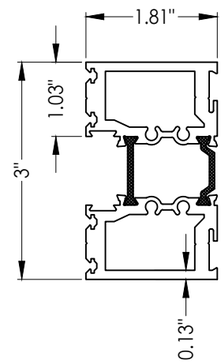

1 LT NARROW FRAME

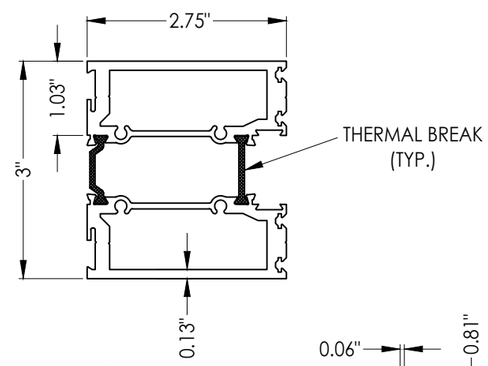

2 LT FRAME

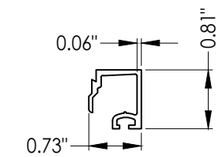

5 1/4" GLASS STOP

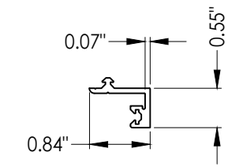

6 SLIDE-IN DOOR STOP

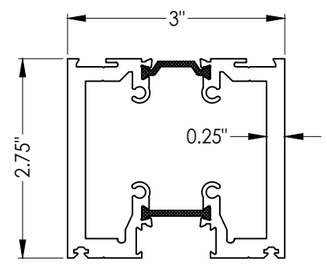

4 PIVOT FRAME

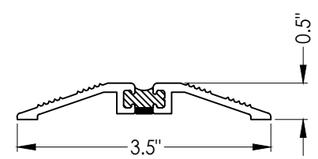

10 ADA SILL

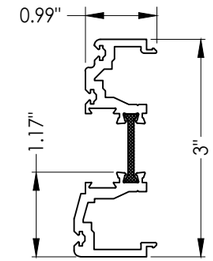

11 SWING DOOR ADAPTER

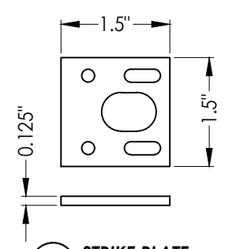

24 STRIKE PLATE @ HEAD

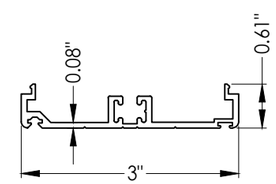

15 DOOR ADAPTER

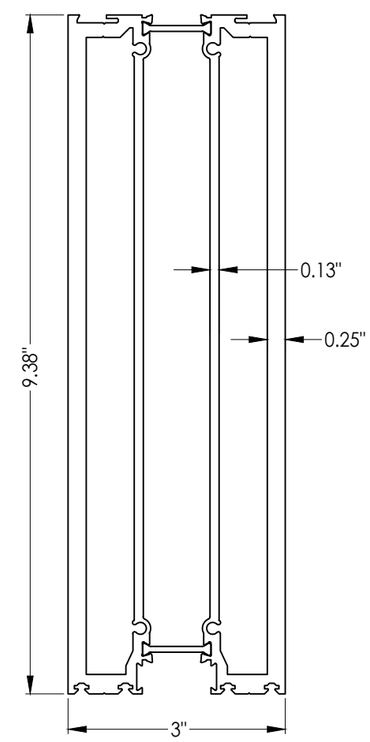

18 DOOR BOTTOM PANEL

CORROSION RESISTANCE - SALTWATER ENVIRONMENTS
Fasteners & connectors in areas within 3000 ft (914 m) of a saltwater coastline shall comply with FBC Sections 1711.1 or R332.1.

Documents Prepared By:
Lyndon F. Schmidt
P.E. No. 43409

RW BUILDING CONSULTANTS, INC.
P.O. Box 230, Valrico, FL 33595
Phone No.: 813.659.9197
FBPE Registry No. 9813

PRODUCT: THERMA TRU

PART OR ASSEMBLY: BILL OF MATERIAL & COMPONENTS

REVISIONS

NO.	DATE		BY
1	7/03/26	UPDATE TO 9TH ED. (2026) FBC	LFS

DATE: 2/07/24
SCALE: N.T.S.
DWG. BY: JK
CHK. BY: RW
DRAWING NO.: FL-46173.5
SHEET 12 OF 12

© 2024 R.W. BUILDING CONSULTANTS INC.

Z:\2023 FBC Drawings\Therma-Tru\FL-46173 R1\FL 46173.5.dwg